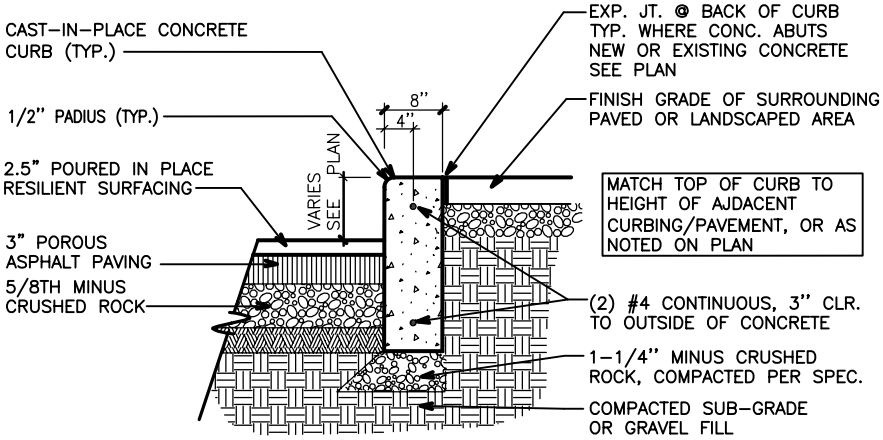

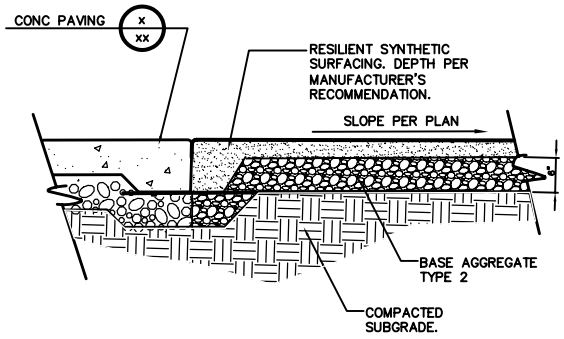

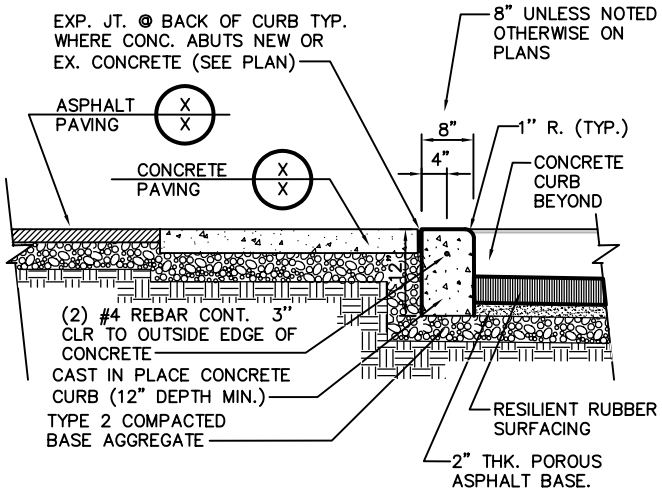

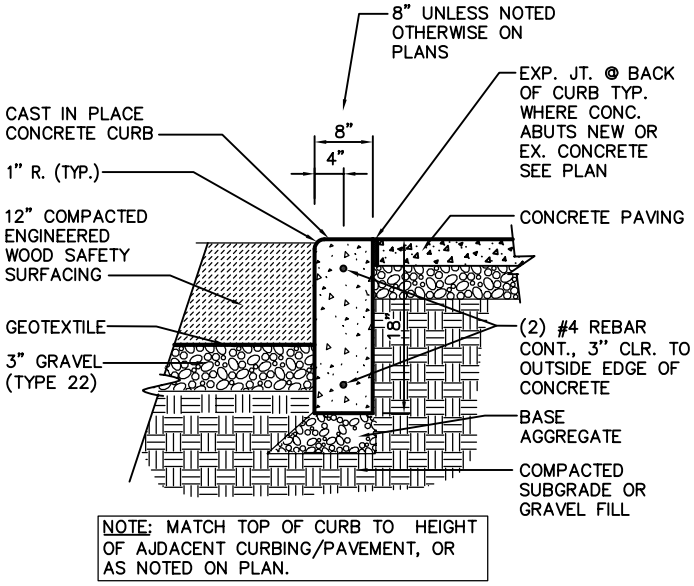

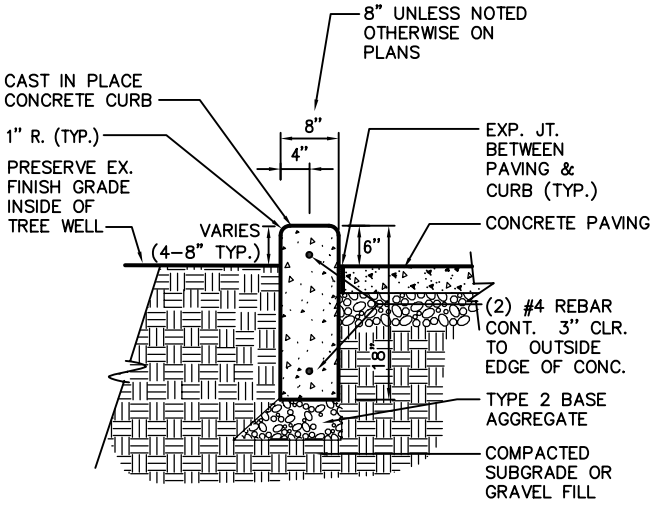

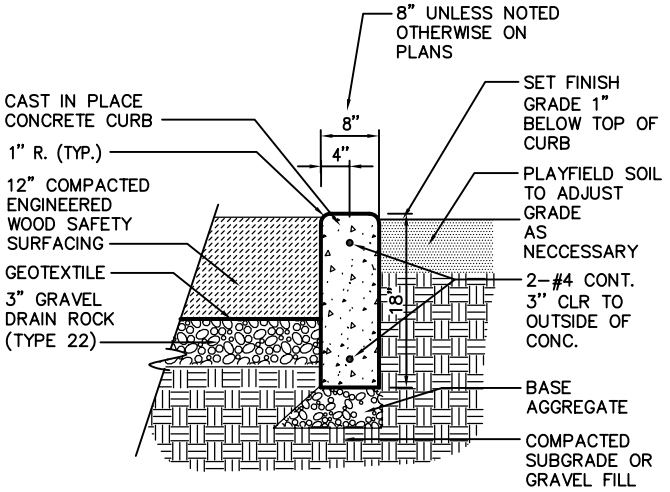

City of Seattle
Department of Parks & Recreation

PLAY AREA CONCRETE CURB DETAILS

STD. DETAIL NO. 32 15 73