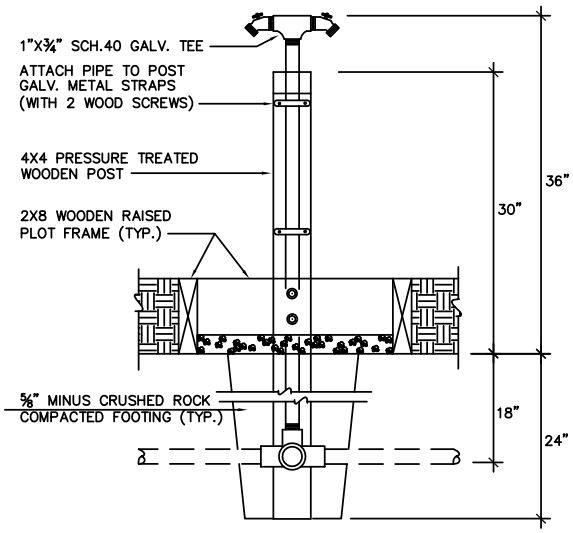

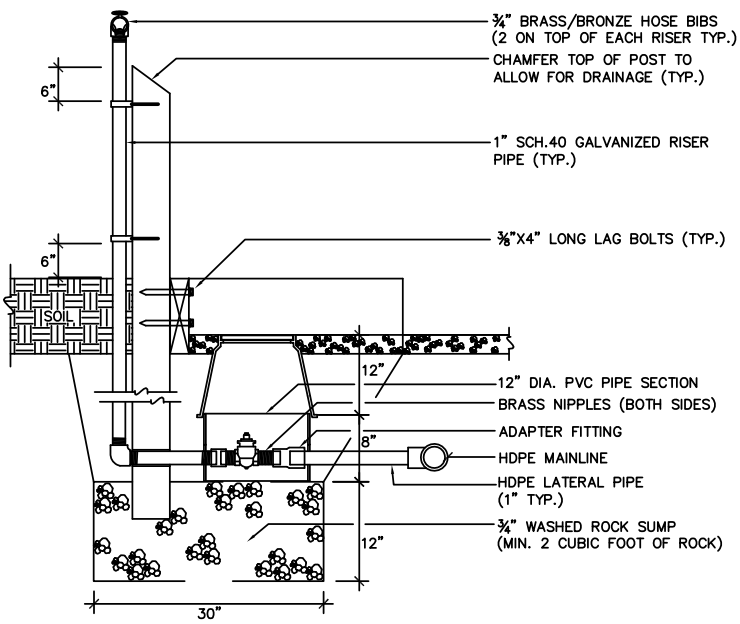

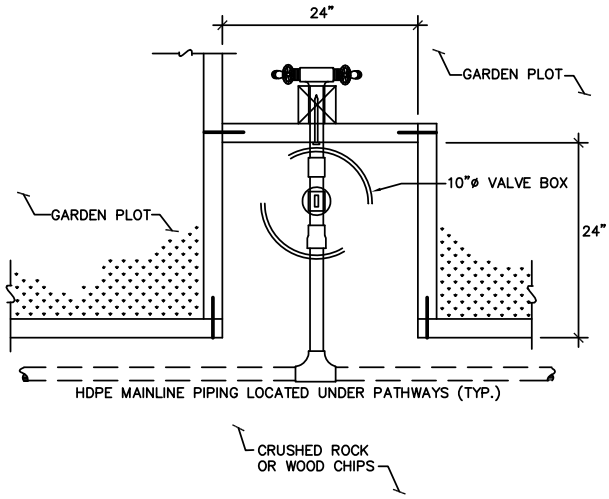

GENERAL NOTES:

1.) ALL HARDWARE SHALL BE HOT-DIPPED GALVANIZED OR STAINLESS STEEL.
2.) ALL HOSE BIBS SHALL BE STADARD ¾" BRASS WITH HANDLE (PART #92836) OR STANDARD ¾" BRASS WITH KEY (PART #AH302LK) (OR APPROVED EQUAL).
3.) ALL POSTS SHALL BE 4X4 PRESSURE TREATED DOUG FIR OR RECYCLED PLASTIC LUMBER.
4.) ALL MAINLINE OR LATERAL PIPING SHALL BE EITHER SCH 40 PVC, HIGH DENSITY POLYETHYLENE (HDPE) WITH 'BARBED' FITTINGS, OR 'TYPE K' COPPER WITH 'SWEAT' FITTINGS

City of Seattle Department of Parks & Recreation	**P-PATCH HOSE BIB & RISER DETAIL** **STD. DETAIL NO. 33 12 16.43**