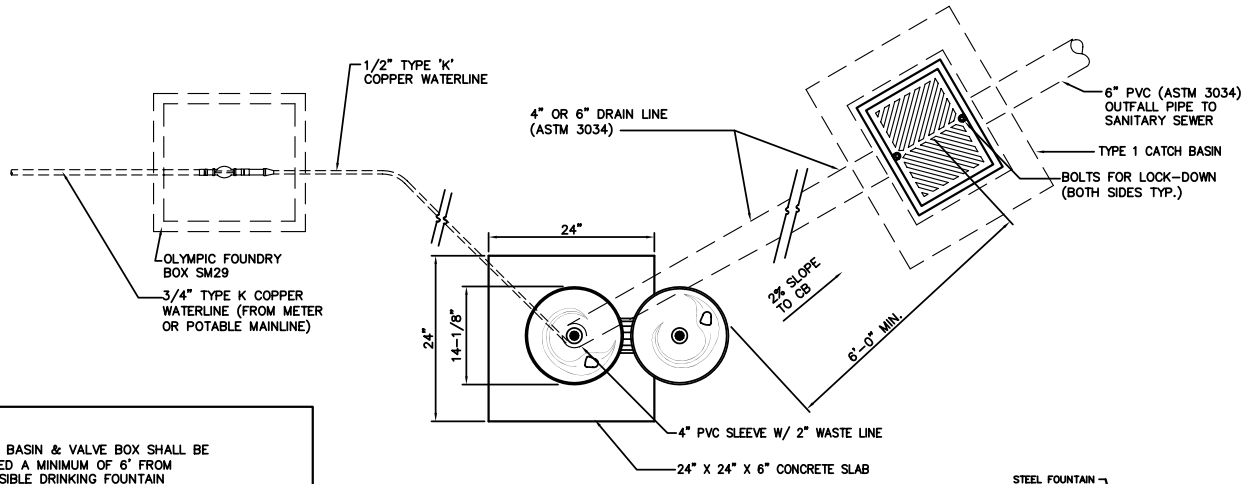

PLAN VIEW

NOTE:
CATCH BASIN & VALVE BOX SHALL BE LOCATED A MINIMUM OF 6' FROM ACCESSIBLE DRINKING FOUNTAIN

ATTENTION INSTALLER:
DURING INSTALLATION OF THIS FOUNTAIN, MAKE SURE SUPPLY LINE AND LINE FROM VALVE TO BUBBLER DOES NOT KINK. ALLOW EXTRA SLACK FOR FRONT PLATE REMOVAL AND VALVE ACCESS.

MOUNTING DETAIL

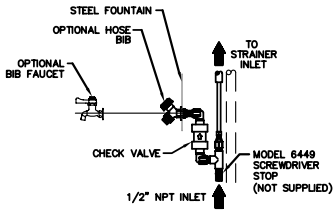

OPTIONAL HOSE OR FAUCET BIB DETAIL

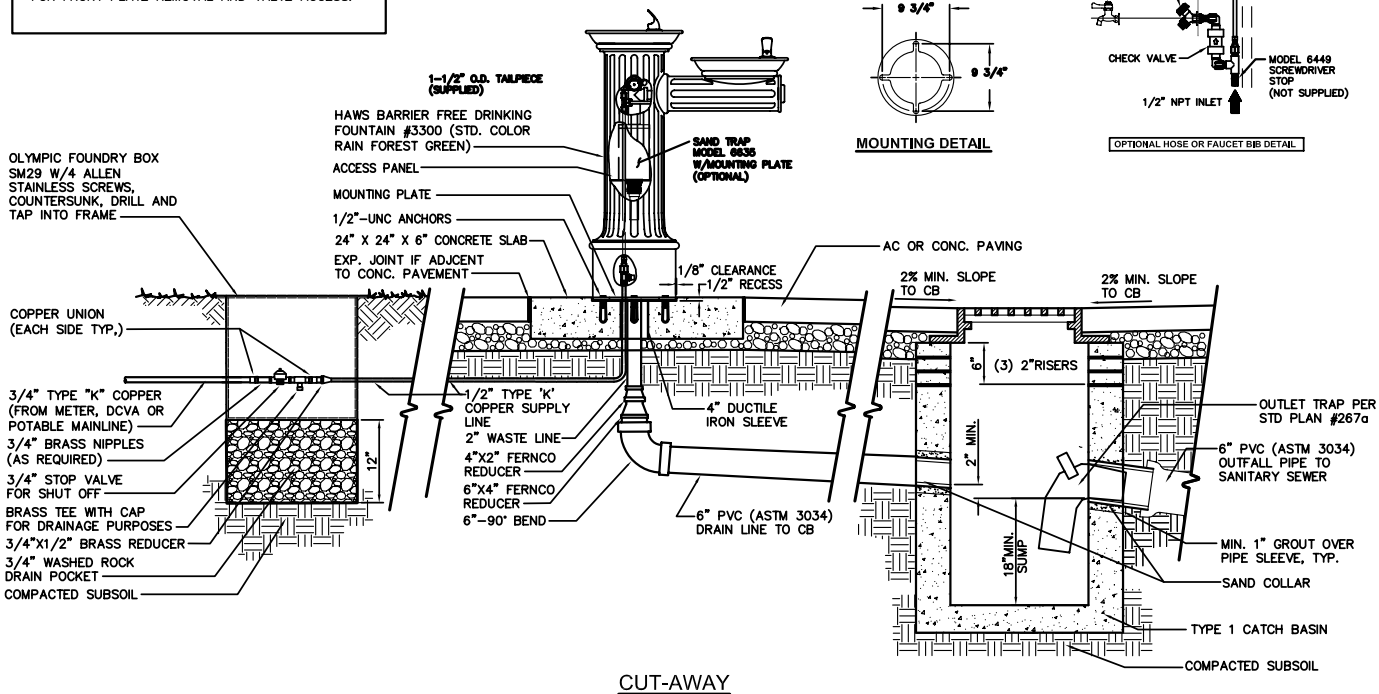

CUT-AWAY
SECTION VIEW

City of Seattle Department of Parks & Recreation	**DRINKING FOUNTAIN - "HISTORIC - HAWS MODEL #3511 INSTALLATION DETAILS** **STD. DETAIL NO. 12 93 93.19**